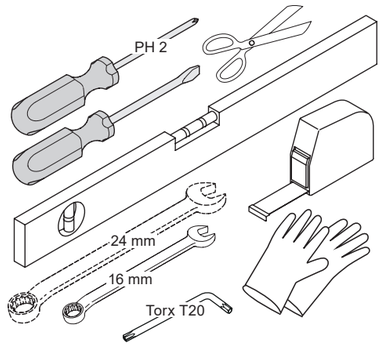

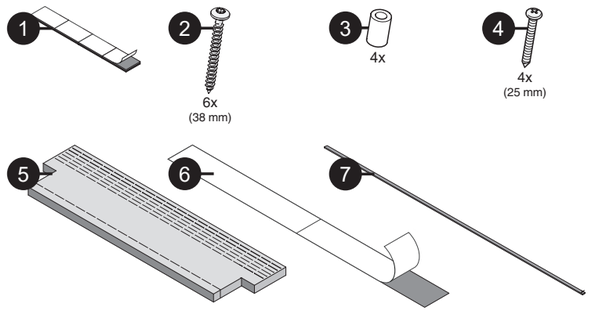

1

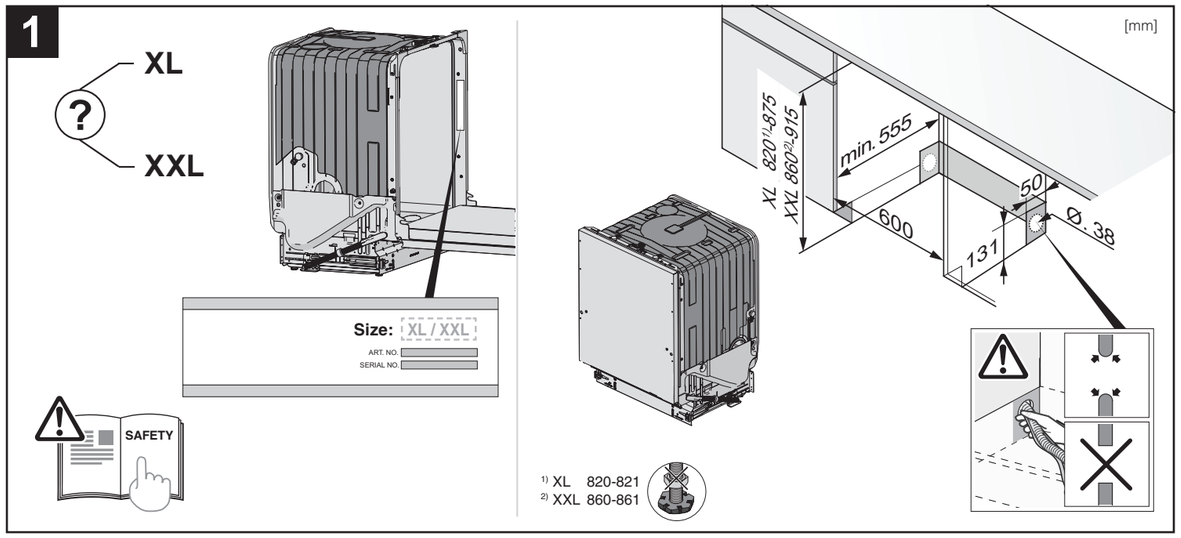

2

3

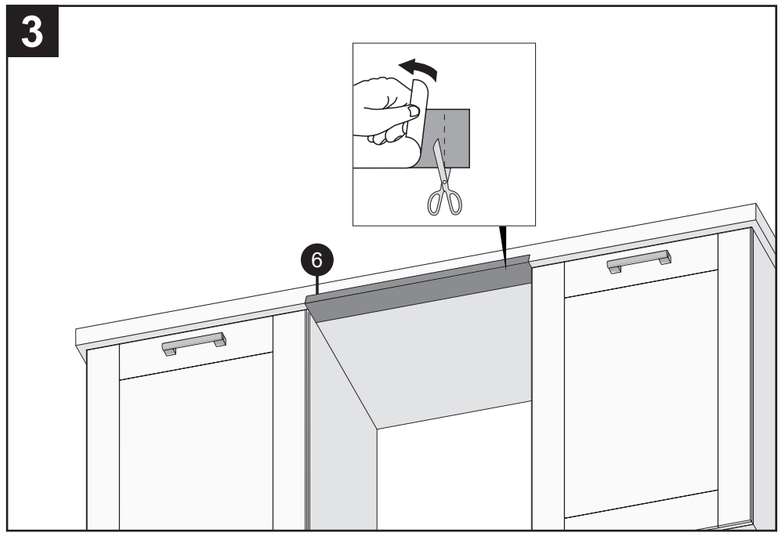

4

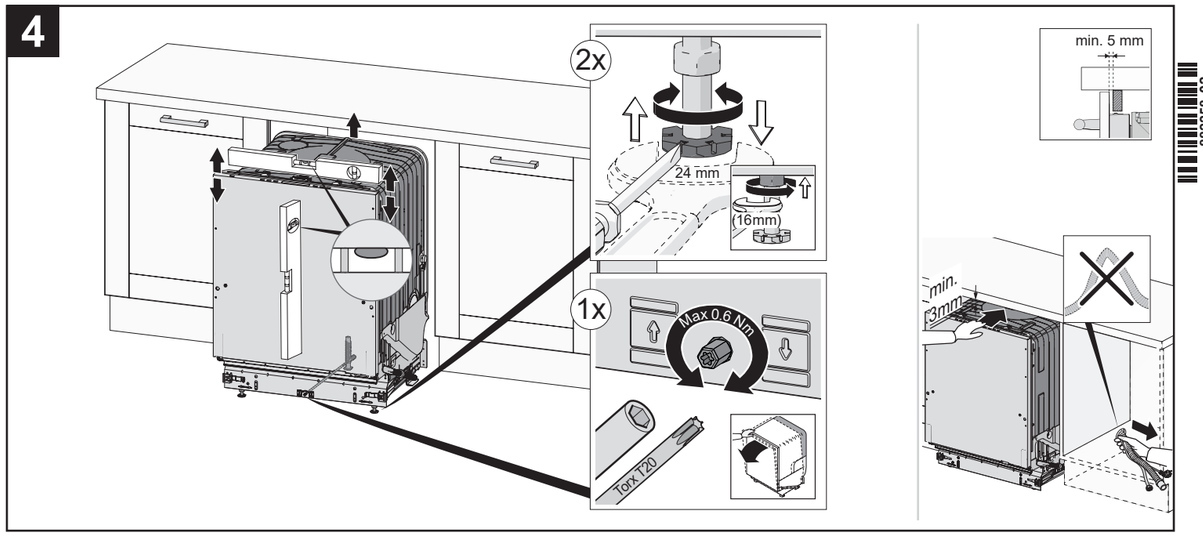

5

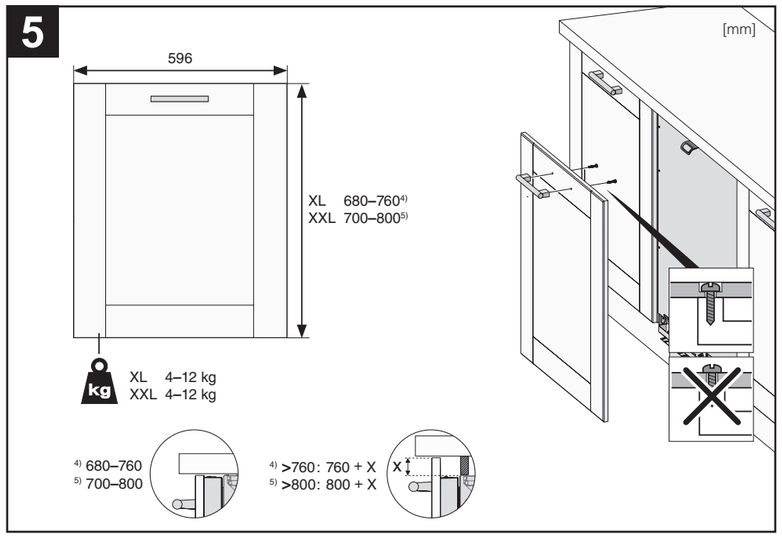

*

Only Certain Models

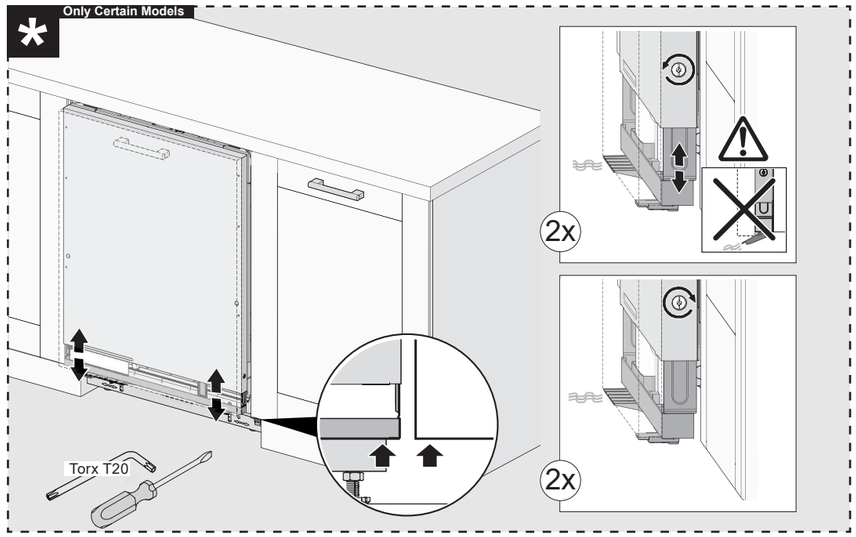

6

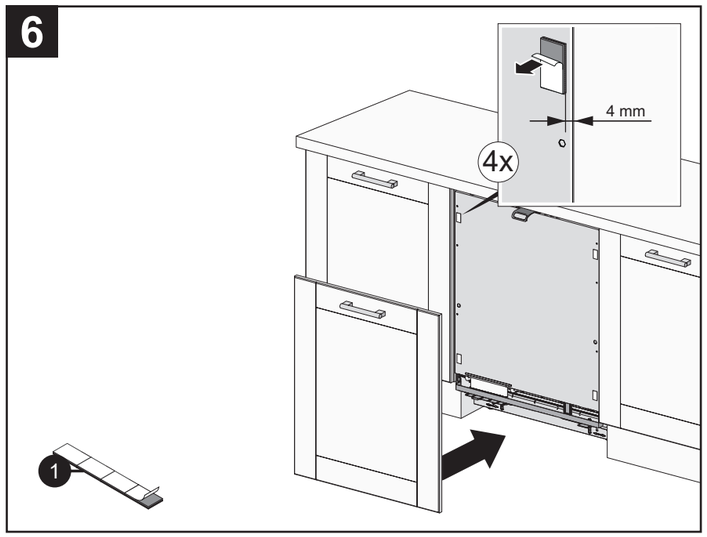

882258-02

We reserve the right to make changes.

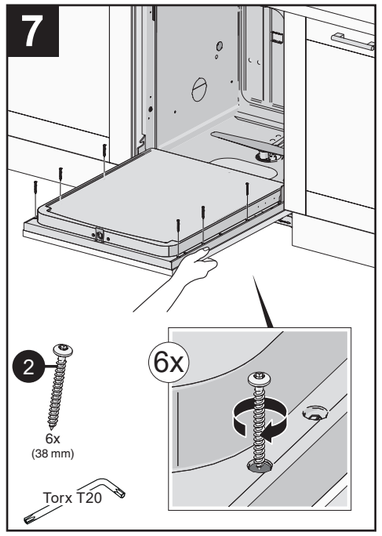
7
2
6x
(38 mm)
Torx T20
6x

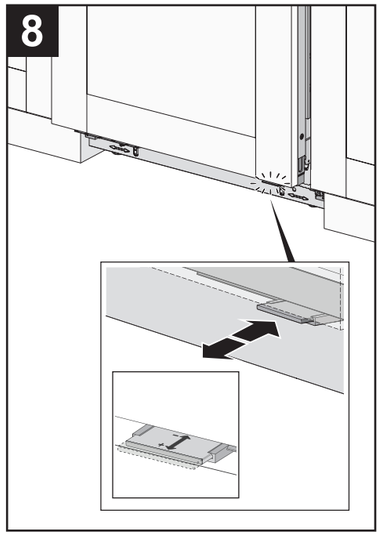
8

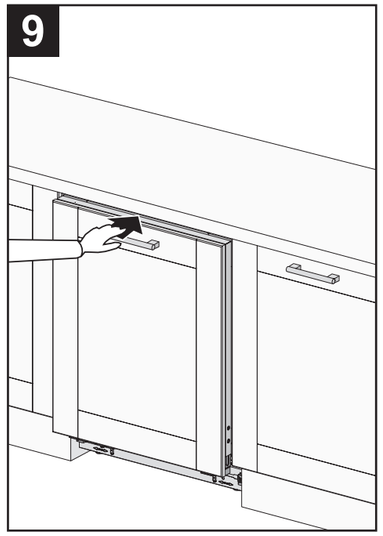
9

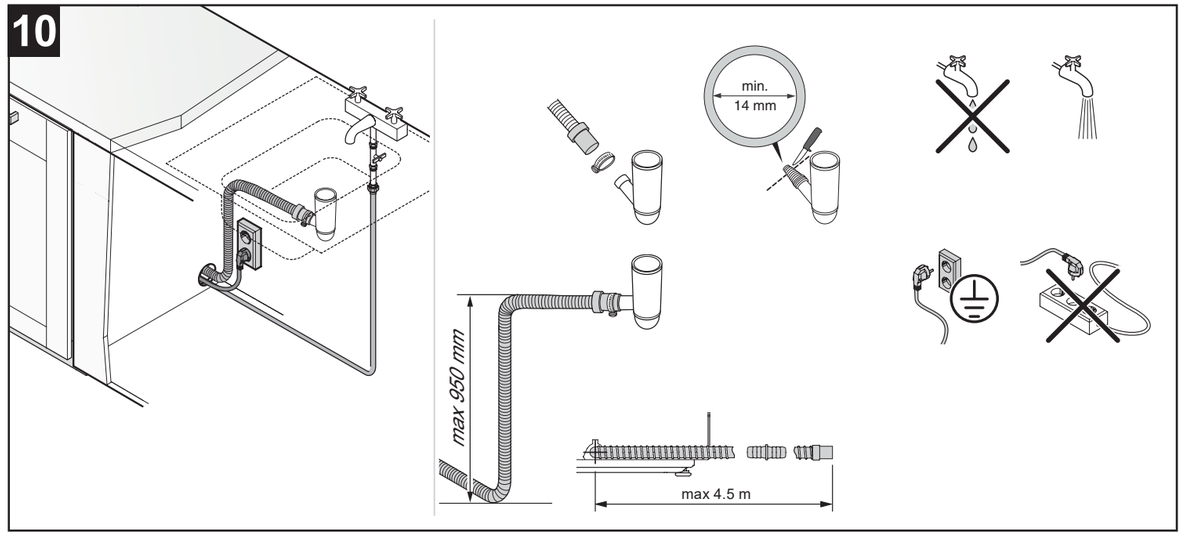
10
min.
14 mm
max 950 mm
max 4.5 m

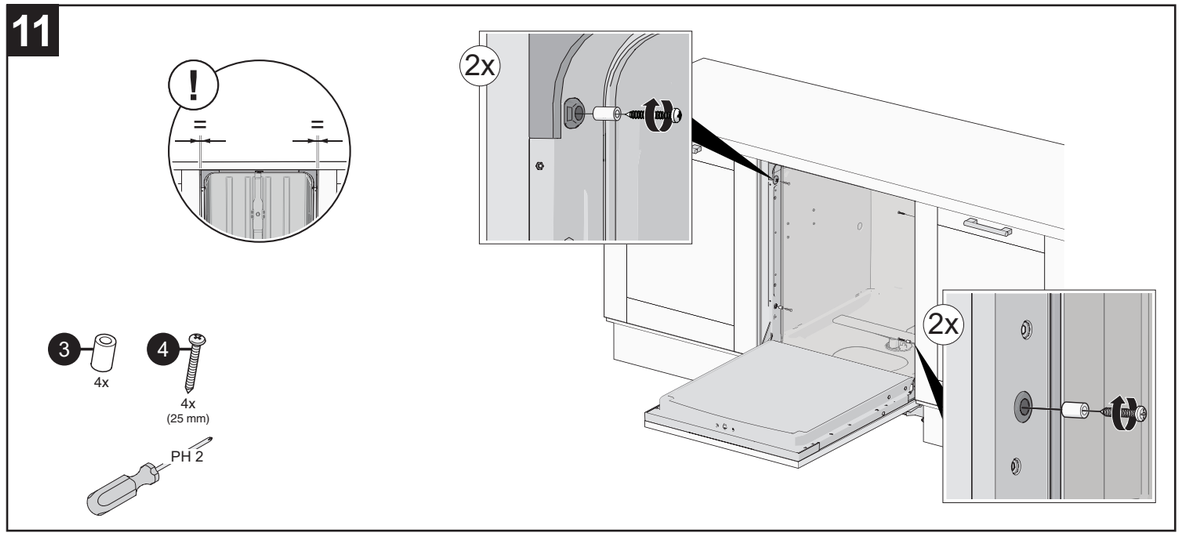
11
!
=
=
2x
2x
3
4x
4
4x
(25 mm)
PH 2

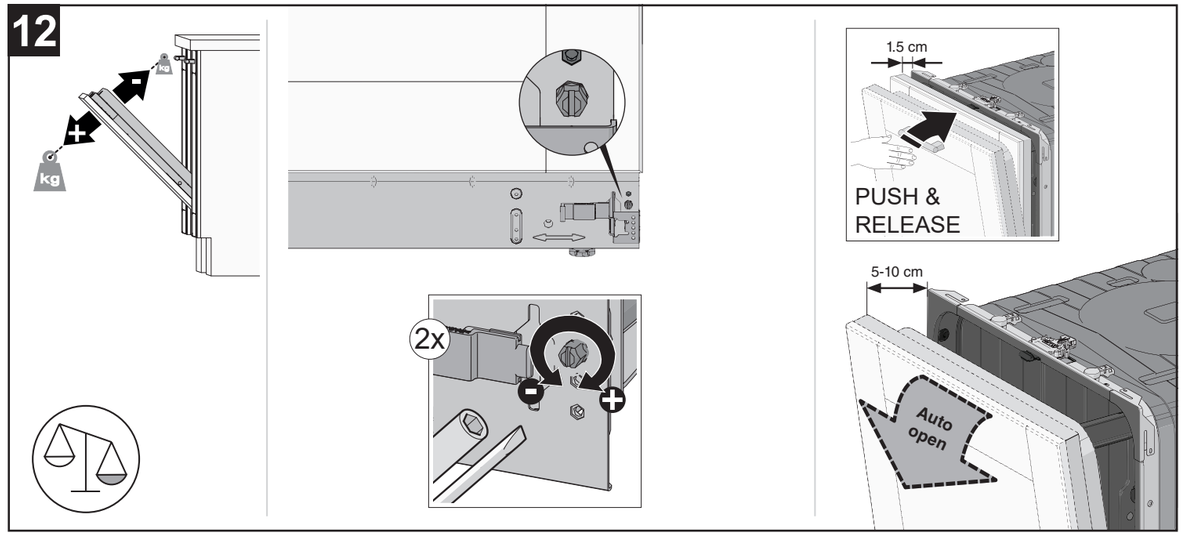
12
kg
kg
2x
1.5 cm
PUSH &
RELEASE
5-10 cm
Auto
open

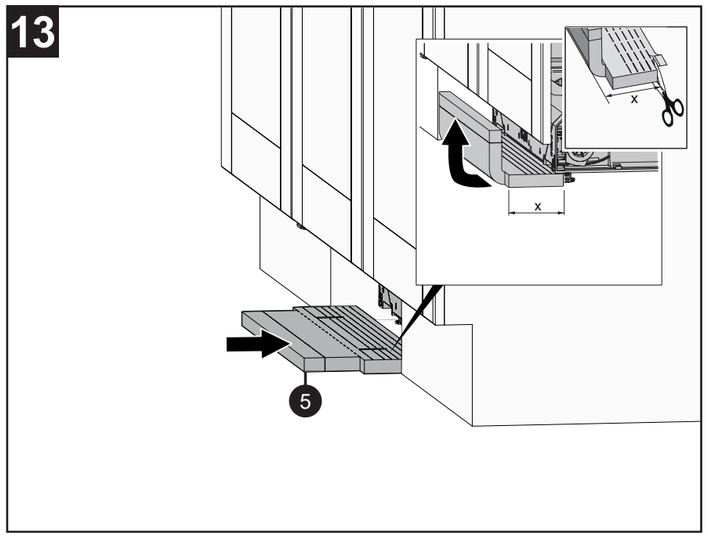
13
x
x
5

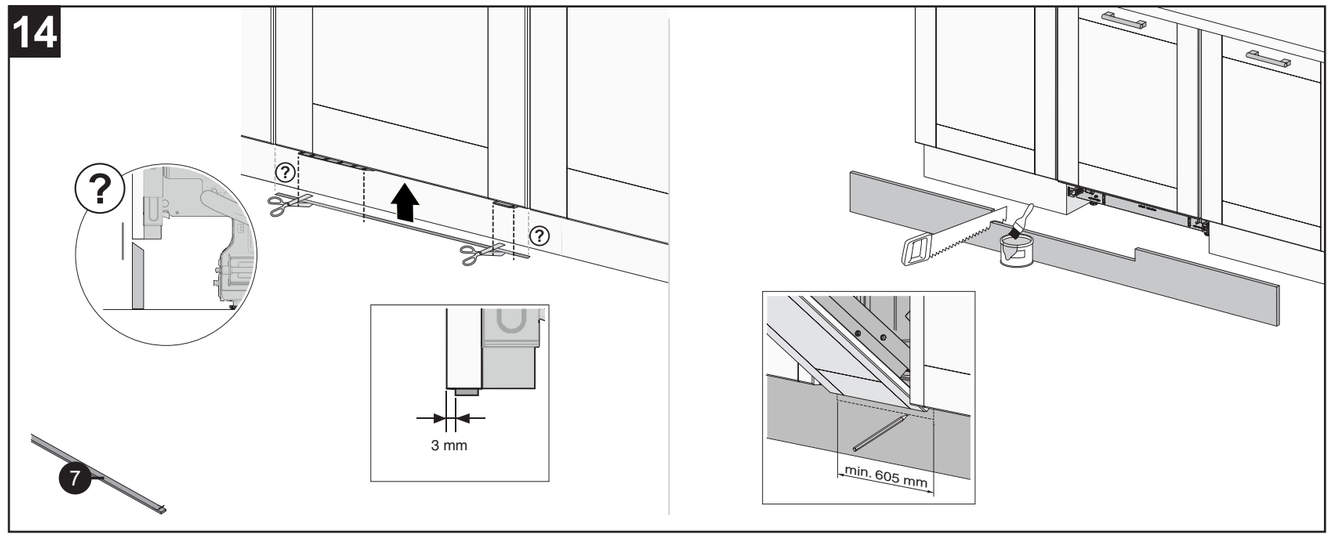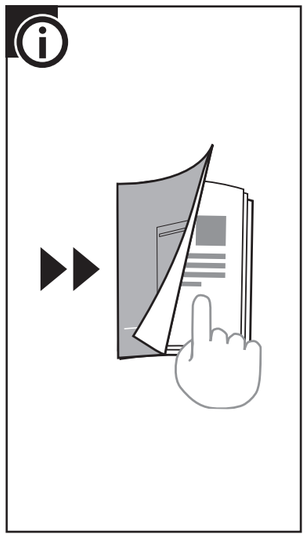
14
?
3 mm
7
min. 605 mm